此线为标贴切割线

ELECTRICAL WIRING DIAGRAM

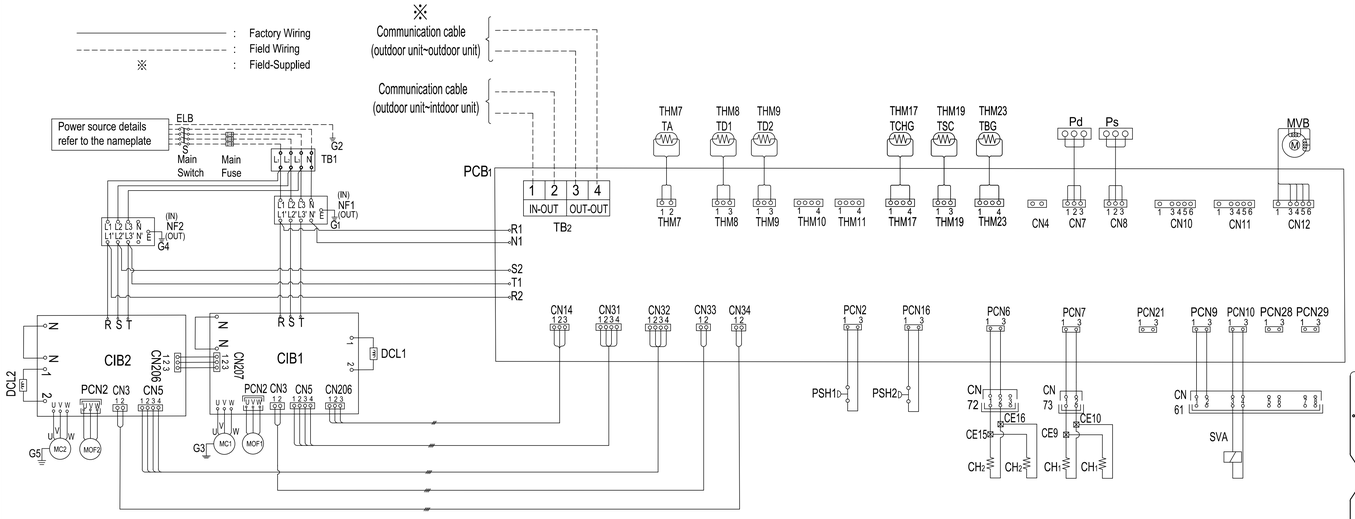

Mark	Name
TB_1	Terminal Board
$CIB_{1,2}$	Convert Inverter Break
CN,PCN	Connector
$DCL_{1,2}$	Reactor
FANM	Fan Module
$G_{1\sim5}$	Earth
$MC_{1,2}$	Motor for Compressor
$MOF_{1,2}$	Motor for Outdoor Fan
MVB	Micro-Computer Control Expansion Valve
$NF_{1,2}$	Noise Filter
PCB_1	Printed Circuit Board
P_d, P_s	Sensor for Refrigerant Pressure
$PSH_{1,2}$	Pressure Switch for Protection
SVA	Solenoid Valve
$THM_{1\sim10}$	Thermistor
○	Terminals

Electrical Control Box of Outdoor Unit

The Electrical Control Box

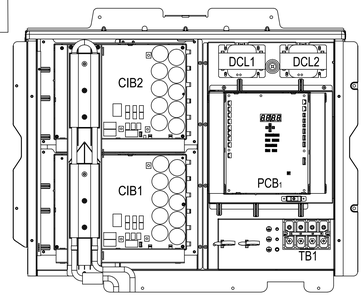

Note:

1. All the field wiring and equipment must comply with local codes.

Location of Main Parts

190～232kBtu/h

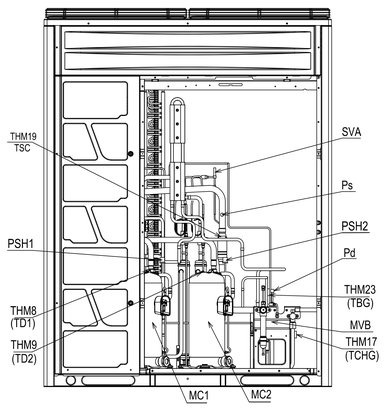

250～272kBtu/h

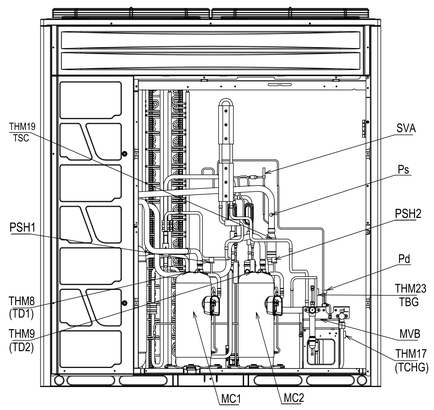

The Electrical Control Box (opened the P separator)

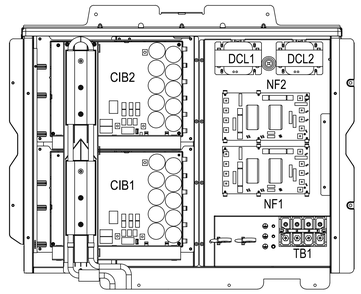

No.	Name	Calculating Method	Additional Charge (kg)
1	W1	Additional Refrigerant Charge Calculation for Liquid Piping (W_1 Kg)	kg
2	W2	Additional Refrigerant Charge Calculation for Indoor Unit (W_2 Kg)	kg
3	W3	Additional Refrigerant Charge for Connection Ratio (W_3 Kg)	kg
4	W	Total Ref. Charge of This System = W1 + W2 + W3	kg

Additional Refrigerant Charge Calculation for Liquid Piping (W_1 Kg)

Pipe Diameter	Total Piping Length (m)	Additional Charge Per Meter (kg)	Additional Charge (kg)
φ28.6	m	×0.600=	
φ25.4	m	×0.480=	
φ22.2	m	×0.360=	
φ19.05	m	×0.260=	
φ15.88	m	×0.170=	
φ12.7	m	×0.110=	
φ9.53	m	×0.056=	
φ6.35	m	×0.024=	

Additional Refrigerant Charge Calculation for Indoor Unit (W_2 Kg)

（Total capacity of indoor units） kBtu/h × 0.0105 kg/(kBtu/h) = Additional Charge kg

Additional Refrigerant Charge for Connection Ratio (W_3 Kg)

(Total capacity of indoor units/Total capacity of outdoor units)

Connection Ratio	Additional Refrigerant
less than or equal 100%	0.0kg
101～115%	0.5kg
116～130%	1.0kg
131～145%	1.5kg
146～160%	2.0kg
161～180%	2.5kg
181～200%	3.0kg

NOTE: For 76-114 kBtu/h type,the maximum value of W3 is 0.0kg,
for 136-154 kBtu/h type,the maximum value of W3 is 1.5kg.

Note: Ensure that the total additional charge should not be exceeded the Max. additional refrigerant charge quantity as shown in the table below.

Standard Type	76	96	114	136～154	170	190～232	250～272	290～344	360～422	444～544	552～654	676～816	824～968	988～1088
Max. Additional Ref. Charge Quantity (kg)	27.0	29.0	31.0	34.0	31.7	40.0	42.0	47.2	52.9	60.0	67.9	80.0	90.0	98.0

High-EER Type	152	172	192	210	228	250	268	288～342	364～386	402～456	478 △1
Max. Additional Ref. Charge Quantity (kg)	36.2	41.2	46.3	49.9	53.5	56.3	64.8	70.5	75.9	84.9	90.6

H7A05845A

	变更前	变更后
①	PCN6 PCN7	PCN6 PCN7 CN 72 CN 73 CE15 CE16 CE9 CE10 CH2 CH2 CH1 CH1
②	76～114kBtu/h （宋体）	76～114kBtu/h （Arial）
③		制冷剂标贴新增内容

High-EER Type	152	172	192	210	228	250	268	288～342	364～386	402～456	478
Max. Additional Ref. Charge Quantity (kg)	36.2	41.2	46.3	49.9	53.5	56.3	64.8	70.5	75.9	84.9	90.6

NOTE: For 76-114 kBtu/h type,the maximum value of W3 is 0.0kg,
for 136-154 kBtu/h type,the maximum value of W3 is 1.5kg.

适用机型表

序号	适用机型
①	AVWT-190～272CKFSE

技术要求

1. 本品应符合 Q/HH J04614《铜版纸标贴件技术条件》要求。
2. 背面要有粘着剂，并贴付离型纸。
3. 底色为白色，文字、图像为黑色。
4. 贴在环境温度为60℃的铁板上时，无自然脱离现象。
5. 文字、图像等的排列要与图纸一致。
6. 本部品应符合Q/HH J04619《空调产品中限用物质的限量要求》。

标记	管理编号	日期	更改	审核	批准
△1	QZ/XF-2008-019	20-08-14	周 韶华	陈 亚瑜	孙 龙
	△1 X 1 更新冷媒追加规则				
△2	QZ/XF-2006-118	20-06-28	王 泽	陶 友海	何 成军
	△2 X 3 增加加热带部分，变更字体为Arial，完善制冷剂添加部分。				

	签名	日期
设计	王 泽	19-12-24
审核	悦 磊	19-12-24
工艺		
标准化	刘 爱华	19-12-24
批准	林 文涛	20-09-01

CAD

比例	分类	重量等级	标准	图幅	版本号
NTS	B			A0	2

青岛海信日立空调系统有限公司

电气接线图标贴

H7A05845